Reliable®

Model F3QR56 Series Quick-Response Dry Sprinkler

K-factor 5.6 (80 metric)

Features

- Various trim options available
- Sprinklers and trim available in a wide variety of standard and special application finishes
- Listed corrosion resistant combinations of sprinkler and trim available

Product Description

Model F3QR56 dry sprinklers are Quick-Response, standard coverage sprinklers with a nominal K-factor of 5.6 (80 metric). Available in pendent, horizontal sidewall, and upright configurations, Model F3QR56 dry sprinklers utilize a 3mm glass bulb ordinary, intermediate, or high temperature classification operating element.

Model F3QR56 dry sprinklers are intended for installation on wet pipe, dry pipe, or preaction systems in accordance with NFPA 13, FM Property Loss Prevention Data Sheets, or other applicable installation standards.

Model F3QR56 dry sprinklers are available in a variety of trim options and finish combinations as shown on the following pages. The Reliable escutcheons and cover plates shown are the only escutcheons and cover plates listed for use with the sprinkler. The use of any other escutcheon or cover plate will void all guarantees, warranty, listing, and approvals.

Standard inlet fitting threads are 1" NPT or ISO7-R1 threads. An inlet fitting with 3/4" NPT or ISO7-R3/4 threads (cULus listed only) is also available for select sprinklers for replacement of existing sprinklers.

Table A provides a basic summary of Model F3QR56 dry sprinklers. Additional technical information is provided on the following individual sprinkler pages.

(**Note**: not all versions of sprinkler shown, please see pages 2 through 13)

Sprinkler Summary — **Table A**

Model	K-Factor gpm/psi$^{1/2}$ (lpm/bar$^{1/2}$)	Approvals*	Max. Working Pressure psi (bar)	Sprinkler Identification Number (SIN)
F3QR56 Dry Pendent	5.6 (80)	cULus, FM	175 (12.0) cULus 250 (17.2)	R5714
F3QR56 Dry Horizontal Sidewall	5.6 (80)	cULus, FM	175 (12.0) cULus 250 (17.2)	R5734
F3QR56 Dry Upright	5.6 (80)	cULus	175 (12.0)	R5724

***Note:** Approvals may not apply to all trim, inlet thread, temperature, and/or finish combinations. See pages 2-11 for additional technical information.

Model F3QR56 Dry Pendent: Standard Escutcheon - SIN R5714 **Table B**

"A" Dimension in (mm)	Temperature Classification	Temperature Rating °F (°C)	Glass Bulb Color	Approvals	Sprinkler Guard
2" to 48" (51mm to 1219mm) in 1/4" (6mm) increments for 1" connections or 2" to 36" (51mm to 914mm) in 1/4" (6mm) increments for 3/4" connections	Ordinary	155°F (68°C)	Red	cULus FM	C-2
	Intermediate	175°F (79°C)	Yellow		
		200°F (93°C)	Green		
	High	286°F (141°C)	Blue		

Note: Standard inlet fitting threads are 1" NPT or ISO7-R1. Inlet fitting is also available with 3/4" NPT and ISO-R3/4 threads for replacement of existing sprinklers (cULus Listed only).

Model F3QR56 Dry Pendent Sprinkler: Standard Escutcheon **Figure 1**

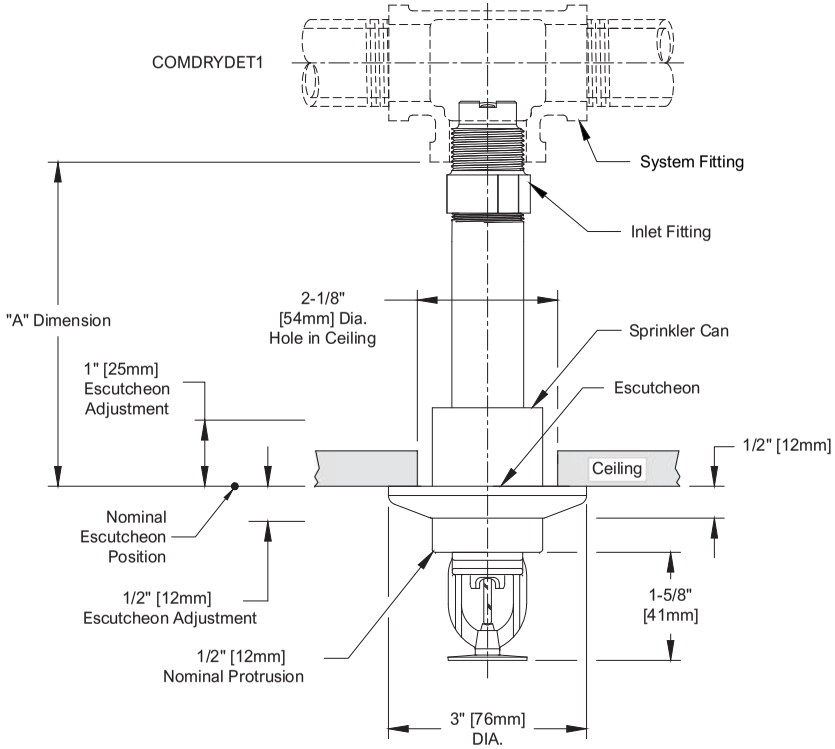

Note: The sprinkler can protrudes 1/2" (12mm) when escutcheon is in nominal position. Escutcheon adjustment provides -1/2" (12mm) to +1" (25mm) "A" dimension adjustment range.

Finish Combinations: Standard Escutcheon	
Sprinkler	**Escutcheon(2)(3)**
Bronze	Polished Stainless
Bronze	Laquered Brass
Chrome	Polished Stainless
White Polyester(1)	White Polyester
Black Polyester(1)	Black Polyester
Custom Color Polyester(1)	Custom Color Polyester
Electroless Nickel PTFE(1)(4)	Polished Stainless

Notes:
1. UL Listed as Corrosion Resistant.
2. Escutcheons do not carry corrosion resistant listings.
3. Base material is 316 stainless steel unless noted.
4. FM Approved as Corrosion Resistant.

Model F3QR56 Dry Pendent: HB Escutcheon - SIN R5714

Table C

"A" Dimension in (mm)	Temperature Classification	Temperature Rating F (C)	Glass Bulb Color	Approvals	Sprinkler Guard
3½" to 48" (89mm to 1219mm) in 1/4" (6mm) increments for 1" connections or 3½" to 36" (89mm to 914mm) in 1/4" (6mm) increments for 3/4" connections	Ordinary	155°F (68°C)	Red	cULus FM	C-2
	Intermediate	175°F (79°C)	Yellow		
		200°F (93°C)	Green		
	High	286°F (141°C)	Blue		

Note: Standard inlet fitting threads are 1" NPT or ISO7-R1. Inlet fitting is also available with 3/4" NPT and ISO-R3/4 threads for replacement of existing sprinklers (cULus Listed only).

Model F3QR56 Dry Pendent Sprinkler: HB Escutcheon

Figure 2

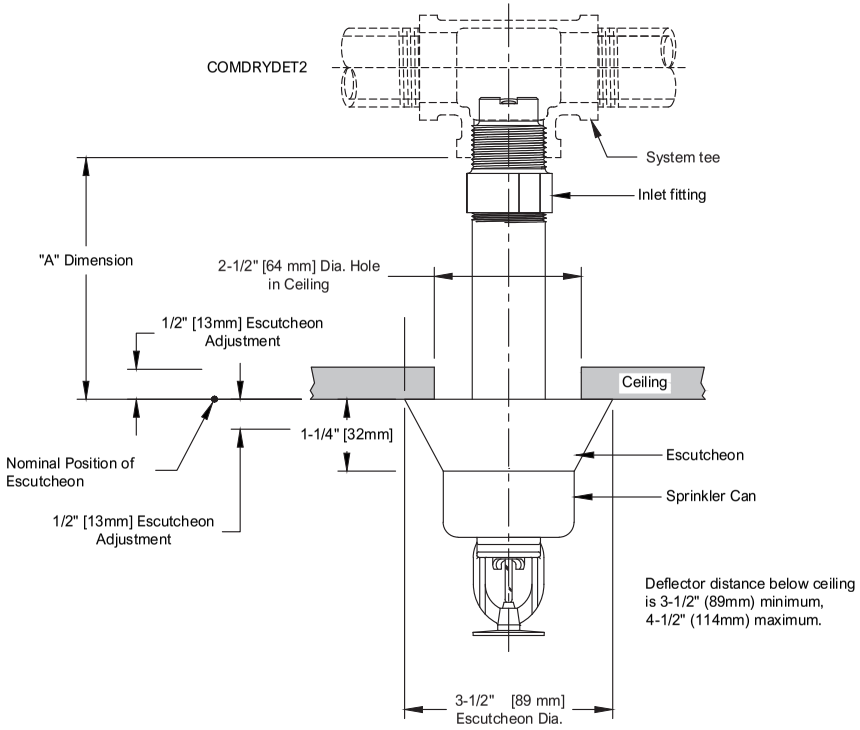

Finish Combinations: HB Escutcheon	
Sprinkler	**Escutcheon(2)(3)**
Bronze	Chrome
Chrome	Chrome
White Polyester(1)	White Polyester
Black Polyester(1)	Black Polyester
Custom Color Polyester(1)	Custom Color Polyester
Electroless Nickel PTFE(1)(4)	Stainless Steel

Notes:
1. UL Listed as Corrosion Resistant.
2. Escutcheons do not carry corrosion resistant listings.
3. Base material is cold rolled steel unless noted.
4. FM Approved as Corrosion Resistant.

Note: The sprinkler can protrudes 1¼" when escutcheon is in nominal position. Escutcheon adjustment provides -½" (-12.7mm) to +½" (+12.7mm) "A" dimension adjustment range.

Model F3QR56 Dry Pendent: FP Escutcheon - SIN R5714 **Table D**

"A" Dimension in (mm)	Temperature Classification	Temperature Rating °F (°C)	Glass Bulb Color	Approvals	Sprinkler Guard
3½" to 48" (89mm to 1219mm) in 1/4" (6mm) increments for 1" connections or 3½" to 36" (89mm to 914mm) in 1/4" (6mm) increments for 3/4" connections	Ordinary	155°F (68°C)	Red	cULus FM	N/A
	Intermediate	175°F (79°C)	Yellow		
		200°F (93°C)	Green		
	High	286°F (141°C)	Blue	cULus	

Note: Standard inlet fitting threads are 1" NPT or ISO7-R1. Inlet fitting is also available with 3/4" NPT and ISO-R3/4 threads for replacement of existing sprinklers (cULus Listed only).

Model F3QR56 Dry Pendent Sprinkler: FP Escutcheon **Figure 3**

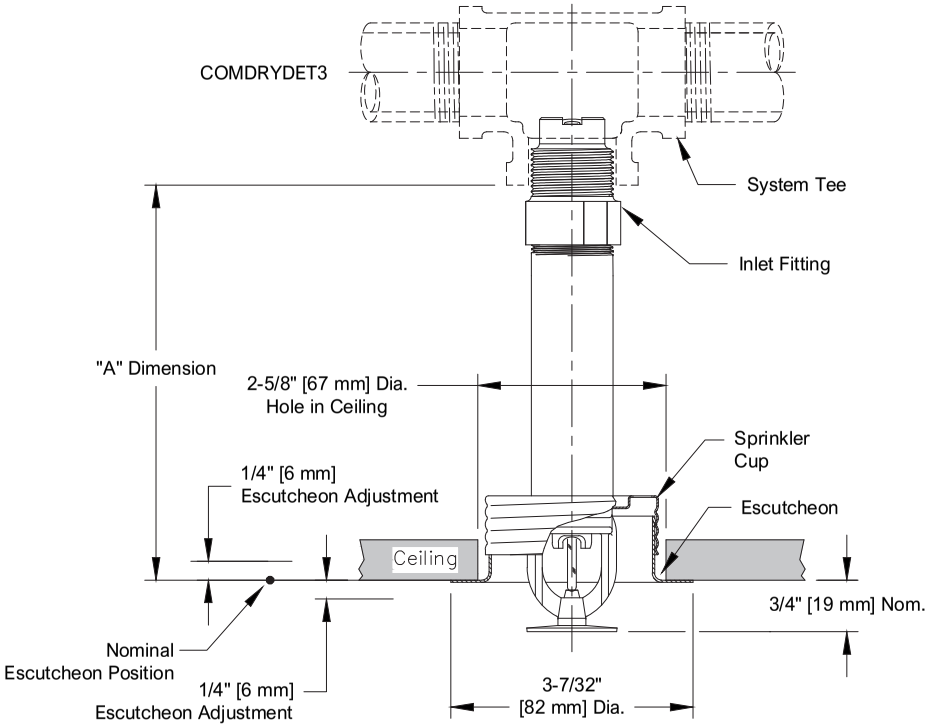

Note: Do not install the Model F3QR56 Dry Pendent sprinkler with the Model FP escutcheon in ceilings which have positive pressure in the space above.

Finish Combinations: FP Recessed	
Sprinkler[1]	**Escutcheon[3][4]**
Bronze	Brass
Chrome	Chrome
White Polyester[2]	White Polyester
Black Polyester[2]	Black Polyester
Custom Color Polyester[2]	Custom Color Polyester
Electroless Nickel PTFE[2][5]	Stainless Steel

Notes:
1. Cup for FP Recessed is unfinished galvanized steel except electroless nickel PTFE sprinklers which are provided with a stainless steel cup
2. UL Listed as Corrosion Resistant.
3. Escutcheons do not carry corrosion resistant listings.
4. Base material is cold rolled steel unless noted.
5. FM Approved as Corrosion Resistant.

Model F3QR56 Dry Pendent: CCP Cover Plate - SIN R5714 **Table E**

"A" Dimension in (mm)	Temperature Classification	Temperature Rating F (C)	Glass Bulb Color	Approvals	Sprinkler Guard
3½" to 48" (89mm to 1219mm) in 1/4" (6mm) increments for 1" connections or 3½" to 36" (89mm to 914mm) in 1/4" (6mm) increments for 3/4" connections	Ordinary	155°F (68°C)	Red	cULus FM	N/A
	Intermediate	175°F (79°C)	Yellow		
		200°F (93°C)	Green		
	High	286°F (141°C)	Blue	cULus	

Note: Standard inlet fitting threads are 1" NPT or ISO7-R1. Inlet fitting is also available with 3/4" NPT and ISO-R3/4 threads for replacement of existing sprinklers (cULus Listed only).

Model F3QR56 Dry Pendent Sprinkler: CCP Cover Plate **Figure 4**

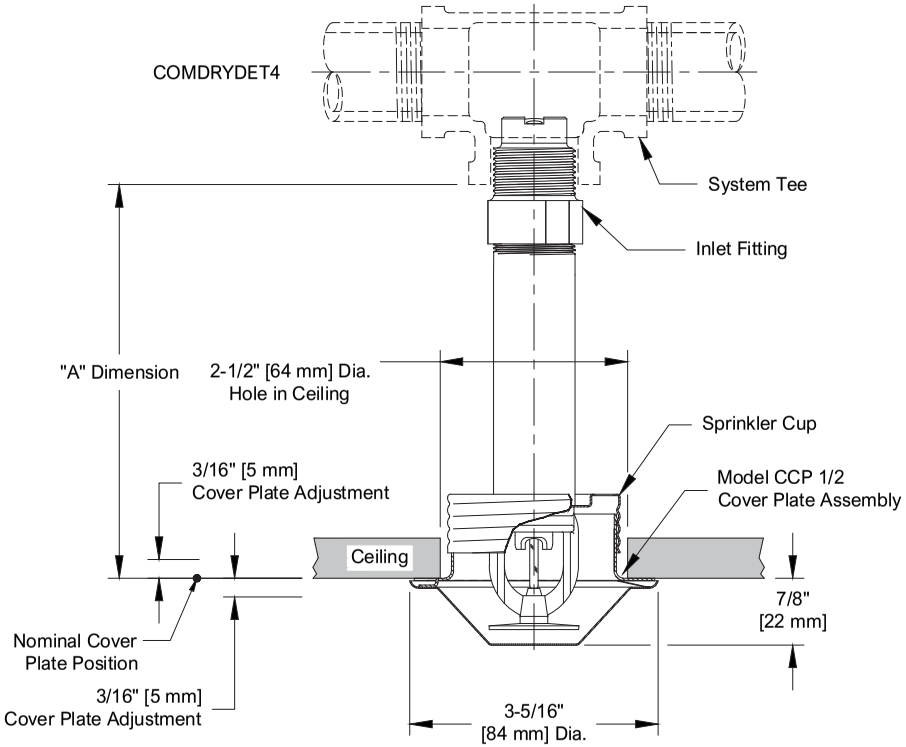

Note: Do not install the Model F3QR56 Dry Pendent sprinkler with the Model CCP cover plate in ceilings which have positive pressure in the space above.

Finish Combinations: CCP Concealed	
Sprinkler(1)	**Cover Plate(2)**
Bronze	White Polyester
	Chrome Bright
	Chrome Dull
	Bright Brass
	Unfinished Bronze
	Black Plate
	Custom Color

Notes:
1. Cup for CCP Concealed is unfinished galvanized steel.
2. Cover plates do not carry corrosion resistant listings.

Model F3QR56 Dry Pendent: F1 Escutcheon - SIN R5714 **Table F**

"A" Dimension in (mm)	Temperature Classification	Temperature Rating °F (°C)	Glass Bulb Color	Approvals	Sprinkler Guard
3½" to 48" (89mm to 1219mm) in 1/4" (6mm) increments for 1" connections or 3½" to 36" (89mm to 914mm) in 1/4" (6mm) increments for 3/4" connections.	Ordinary	155°F (68°C)	Red	cULus FM	N/A
	Intermediate	175°F (79°C)	Yellow		
		200°F (93°C)	Green		
	High	286°F (141°C)	Blue	cULus	

Note: Standard inlet fitting threads are 1" NPT or ISO7-R1. Inlet fitting is also available with 3/4" NPT and ISO-R3/4 threads for replacement of existing sprinklers (cULus Listed only).

Model F3QR56 Dry Pendent Sprinkler: F1 Escutcheon **Figure 5**

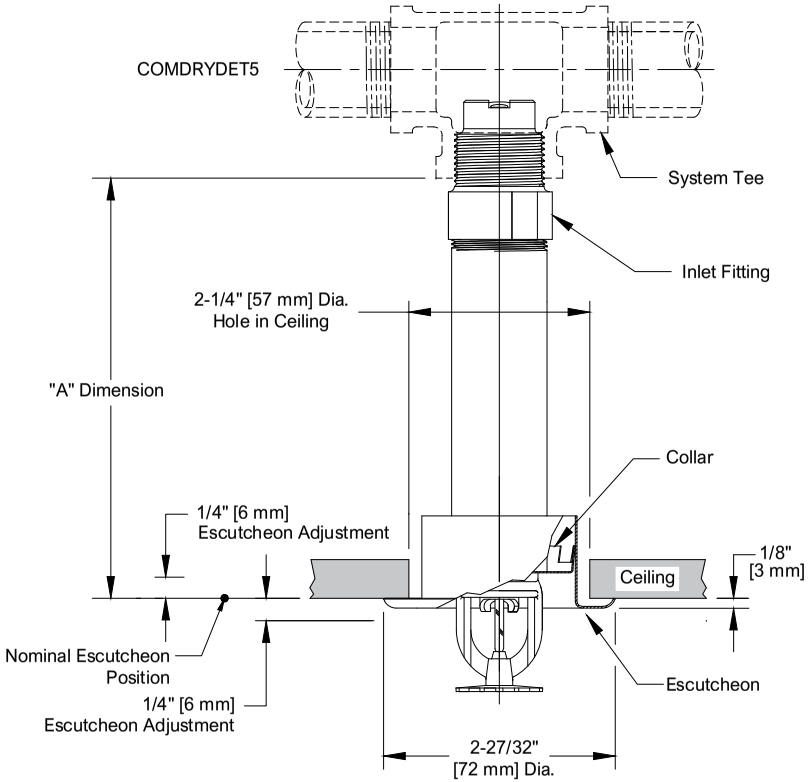

Finish Combinations: F1 Recessed	
Sprinkler	**Escutcheon(2)(3)**
Bronze	Brass
Chrome	Chrome
White Polyester(1)	White Polyester
Black Polyester(1)	Black Polyester
Custom Color Polyester(1)	Custom Color Polyester
Electroless Nickel PTFE(1)(4)	Stainless Steel

Notes:
1. UL Listed as Corrosion Resistant.
2. Escutcheons do not carry corrosion resistant listings.
3. Base material is cold rolled steel unless noted.
4. FM Approved as Corrosion Resistant.

Model F3QR56 Dry Pendent: No Escutcheon - SIN R5714 **Table G**

Order Dimension in (mm)	Temperature Classification	Temperature Rating °F (°C)	Glass Bulb Color	Approvals	Sprinkler Guard
5" to 48" (127mm to 1219mm) in 1/4" (6mm) increments for 1" connections or 5" to 36" (127mm to 914mm) in 1/4" (6mm) increments for 3/4" connections.	Ordinary	155°F (68°C)	Red	cULus FM	N/A
	Intermediate	175°F (79°C)	Yellow		
		200°F (93°C)	Green		
	High	286°F (141°C)	Blue		

Note: Standard inlet fitting threads are 1" NPT or ISO7-R1. Inlet fitting is also available with 3/4" NPT and ISO-R3/4 threads for replacement of existing sprinklers (cULus Listed only).

Model F3QR56 Dry Pendent Sprinkler: No Escutcheon **Figure 6**

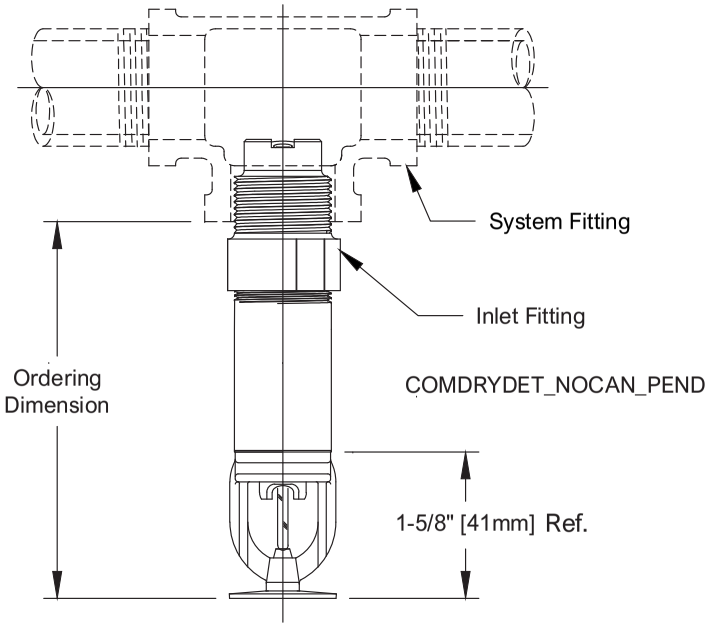

Note: Customer is responsible for determining the correct deflector distance from the ceiling or structure above.

Available Finishes: No Escutcheon
Sprinkler
Bronze
Chrome

Model F3QR56 Dry Horizontal Sidewall: Standard Escutcheon - SIN R5734 **Table H**

"A" Dimension in (mm)	Temperature Classification	Temperature Rating °F (°C)	Glass Bulb Color	Approvals	Sprinkler Guard
2" to 48" (51mm to 1219mm) in 1/4" (6mm) increments for 1" connections or 2" to 36" (51mm to 914mm) in 1/4" (6mm) increments for 3/4" connections	Ordinary	155°F (68°C)	Red	cULus (Light Hazard Only) FM (HC-1 Only)	C-2 (FM Only)
	Intermediate	175°F (79°C)	Yellow		
		200°F (93°C)	Green		
	High	286°F (141°C)	Blue	cULus FM	

Note: Standard inlet fitting threads are 1" NPT or ISO7-R1. Inlet fitting is also available with 3/4" NPT and ISO-R3/4 threads for replacement of existing sprinklers (cULus Listed only).

Model F3QR56 Dry Horizontal Sidewall: Standard Escutcheon **Figure 7**

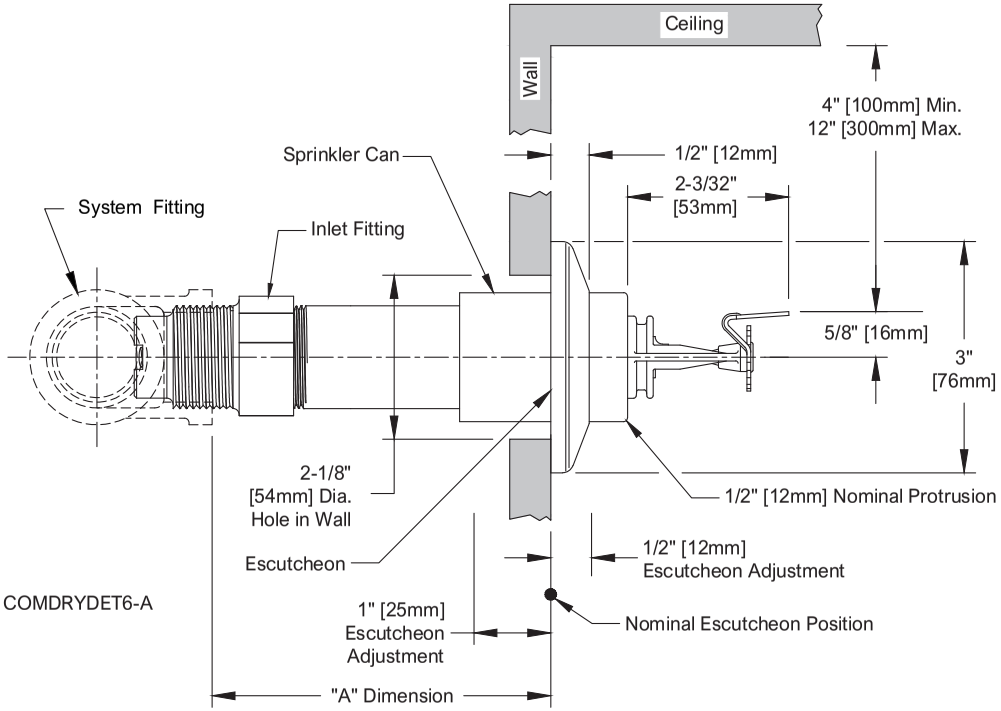

Note: The sprinkler can protrude 1/2" when escutcheon is in nominal position. Escutcheon adjustment provides -1/2" (-12mm) to +1" (25mm) "A" dimension adjustment range.

Finish Combinations: Standard Escutcheon	
Sprinkler	**Escutcheon(2)(3)**
Bronze	Polished Stainless
Bronze	Laquered Brass
Chrome	Polished Stainless
White Polyester(1)	White Polyester
Black Polyester(1)	Black Polyester
Custom Color Polyester(1)	Custom Color Polyester
Electroless Nickel PTFE(1)(4)	Polished Stainless

Notes:
1. UL Listed as Corrosion Resistant.
2. Escutcheons do not carry corrosion resistant listings.
3. Base material is 316 stainless steel unless noted.
4. FM Approved as Corrosion Resistant.

Model F3QR56 Dry Horizontal Sidewall: HB Escutcheon - SIN R5734 **Table I**

"A" Dimension in (mm)	Temperature Classification	Temperature Rating °F (°C)	Glass Bulb Color	Approvals	Sprinkler Guard
3½" to 48" (89mm to 1219mm) in 1/4" (6mm) increments for 1" connections or 3½" to 36" (89mm to 914mm) in 1/4" (6mm) increments for 3/4" connections	Ordinary	155°F (68°C)	Red	cULus (Light Hazard Only) FM (HC-1 Only)	C-2 (FM Only)
	Intermediate	175°F (79°C)	Yellow		
		200°F (93°C)	Green		
	High	286°F (141°C)	Blue	cULus FM	

Note: Standard inlet fitting threads are 1" NPT or ISO7-R1. Inlet fitting is also available with 3/4" NPT and ISO-R3/4 threads for replacement of existing sprinklers (cULus Listed only).

Model F3QR56 Dry Horizontal Sidewall: HB Escutcheon **Figure 8**

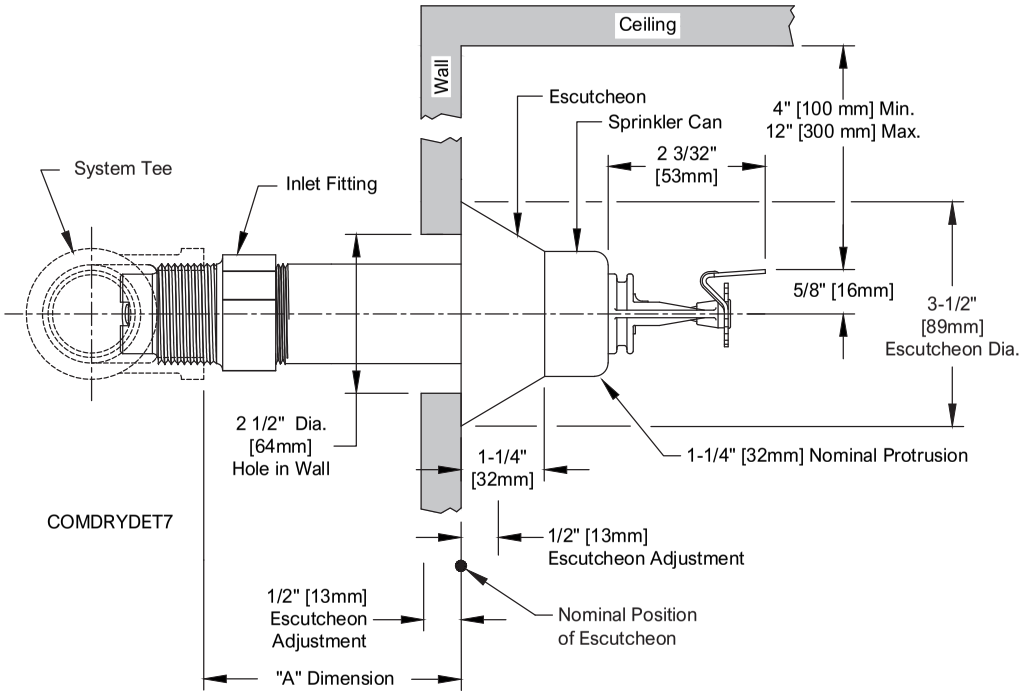

Finish Combinations: HB Escutcheon	
Sprinkler	**Escutcheon(2)(3)**
Bronze	Chrome
Chrome	Chrome
White Polyester(1)	White Polyester
Black Polyester(1)	Black Polyester
Custom Color Polyester(1)	Custom Color Polyester
Electroless Nickel PTFE(1)(4)	Stainless Steel

Notes:
1. UL Listed as Corrosion Resistant.
2. Escutcheons do not carry corrosion resistant listings.
3. Base material is cold rolled steel unless noted.
4. FM Approved as Corrosion Resistant.

Note: The sprinkler can protrudes 1¼" when escutcheon is in nominal position. Escutcheon adjustment provides -½" (-12.7mm) to +½" (+12.7mm) "A" dimension adjustment range.

Model F3QR56 Dry Horizontal Sidewall: FP Escutcheon - SIN R5734

Table J

"A" Dimension in (mm)	Temperature Classification	Temperature Rating °F (°C)	Glass Bulb Color	Approvals	Sprinkler Guard
3½" to 48" (89mm to 1219mm) in 1/4" (6mm) increments for 1" connections or 3½" to 36" (89mm to 914mm) in 1/4" (6mm) increments for 3/4" connections	Ordinary	155°F (68°C)	Red	cULus (Light Hazard Only) FM (HC-1 Only)	N/A
	Intermediate	175°F (79°C)	Yellow		
		200°F (93°C)	Green		
	High	286°F (141°C)	Blue	cULus	

Note: Standard inlet fitting threads are 1" NPT or ISO7-R1. Inlet fitting is also available with 3/4" NPT and ISO-R3/4 threads for replacement of existing sprinklers (cULus Listed only).

Model F3QR56 Dry Horizontal Sidewall: FP Escutcheon

Figure 9

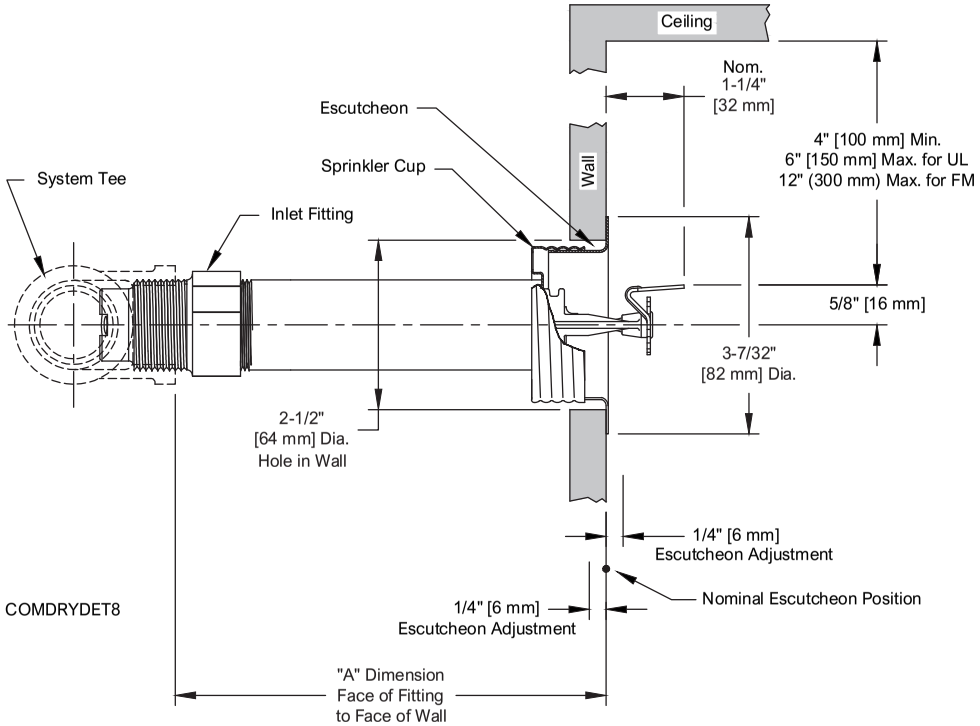

Note: Do not install the Model F3QR56 Dry Horizontal Sidewall sprinkler with the Model FP escutcheon in walls which are positively pressurized with respect to the protected space.

Finish Combinations: FP Recessed	
Sprinkler(1)	**Escutcheon(3)(4)**
Bronze	Brass
Chrome	Chrome
White Polyester(2)	White Polyester
Black Polyester(2)	Black Polyester
Custom Color Polyester(2)	Custom Color Polyester
Electroless Nickel PTFE(2)(5)	Stainless Steel

Notes:
1. Cup for FP Recessed is unfinished galvanized steel except electroless nickel PTFE sprinklers which are provided with a stainless steel cup
2. UL Listed as Corrosion Resistant.
3. Escutcheons do not carry corrosion resistant listings.
4. Base material is cold rolled steel unless noted.
5. FM Approved as Corrosion Resistant.

Model F3QR56 Dry Horizontal Sidewall: F1 Escutcheon - SIN R5734

Table K

"A" Dimension in (mm)	Temperature Classification	Temperature Rating °F (°C)	Glass Bulb Color	Approvals	Sprinkler Guard
3½" to 48" (89mm to 1219mm) in 1/4" (6mm) increments for 1" connections or 3½" to 36" (89mm to 914mm) in 1/4" (6mm) increments for 3/4" connections	Ordinary	155°F (68°C)	Red	cULus (Light Hazard Only) FM (HC-1 Only)	N/A
	Intermediate	175°F (79°C)	Yellow		
		200°F (93°C)	Green		
	High	286°F (141°C)	Blue	cULus	

Note: Standard inlet fitting threads are 1" NPT or ISO7-R1. Inlet fitting is also available with 3/4" NPT and ISO-R3/4 threads for replacement of existing sprinklers (cULus Listed only).

Model F3QR56 Dry Horizontal Sidewall: F1 Escutcheon

Figure 10

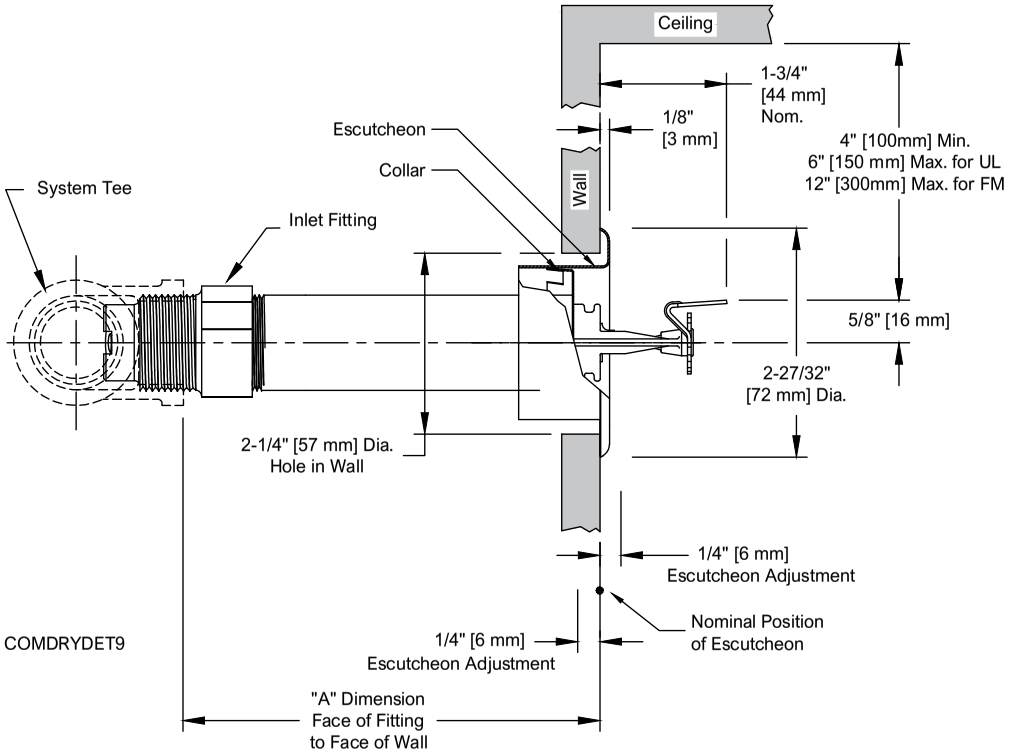

Finish Combinations: F1 Recessed	
Sprinkler	**Escutcheon[2][3]**
Bronze	Brass
Chrome	Chrome
White Polyester[1]	White Polyester
Black Polyester[1]	Black Polyester
Custom Color Polyester[1]	Custom Color Polyester
Electroless Nickel PTFE[1][4]	Stainless Steel

Notes:
1. UL Listed as Corrosion Resistant.
2. Escutcheons do not carry corrosion resistant listings.
3. Base material is cold rolled steel unless noted.
4. FM Approved as Corrosion Resistant.

Model F3QR56 Dry Horizontal Sidewall: No Escutcheon - SIN R5734 **Table L**

Order Dimension in (mm)	Temperature Classification	Temperature Rating °F (°C)	Glass Bulb Color	Approvals	Sprinkler Guard
5" to 48" (127mm to 1219mm) in 1/4" (6mm) increments for 1" connections or 5" to 36" (127mm to 914mm) in 1/4" (6mm) increments for 3/4" connections	Ordinary	155°F (68°C)	Red	cULus (Light Hazard Only) FM (HC-1 Only)	N/A
	Intermediate	175°F (79°C)	Yellow		
		200°F (93°C)	Green		
	High	286°F (141°C)	Blue	cULus FM	

Note: Standard inlet fitting threads are 1" NPT or ISO7-R1. Inlet fitting is also available with 3/4" NPT and ISO-R3/4 threads for replacement of existing sprinklers (cULus Listed only).

Model F3QR56 Dry Horizontal Sidewall: No Escutcheon **Figure 11**

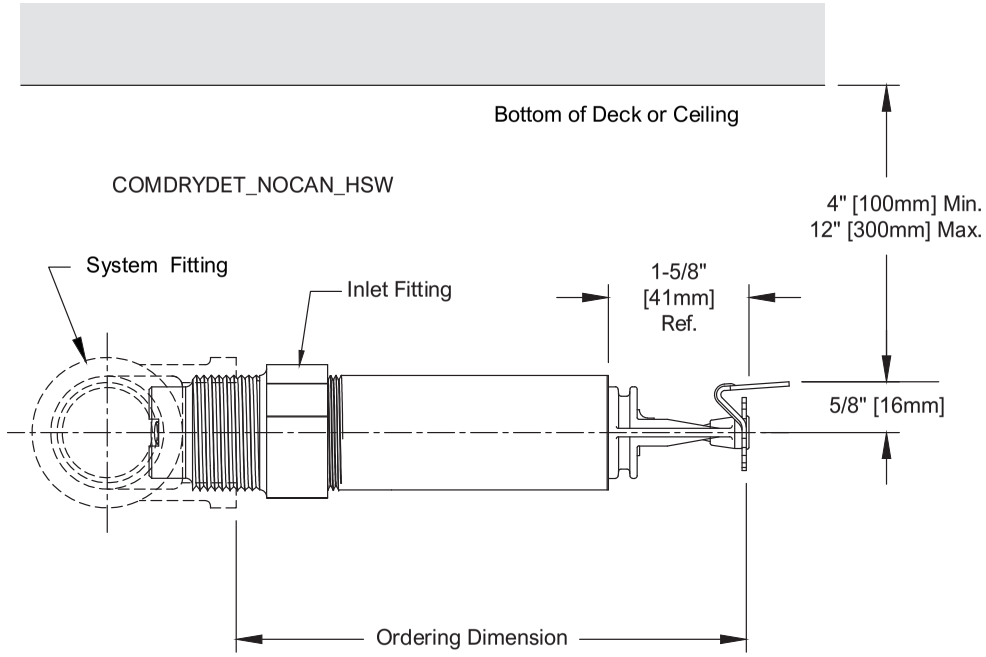

Note: Customer is responsible for determining the correct distance from the wall to the sprinkler deflector.

Available Finishes: No Escutcheon
Sprinkler
Bronze
Chrome

Model F3QR56 Dry Upright - SIN R5724 **Table M**

Order Dimension in (mm)	Temperature Classification	Temperature Rating °F (°C)	Glass Bulb Color	Approvals	Sprinkler Guard
5” to 48” (127 mm to 1219 mm)	Ordinary	155°F (68°C)	Red	cULus	N/A
	Intermediate	175°F (79°C)	Yellow		
		200°F (93°C)	Green		
	High	286°F (141°C)	Blue		

Model F3QR56 Dry Upright Sprinkler **Figure 12**

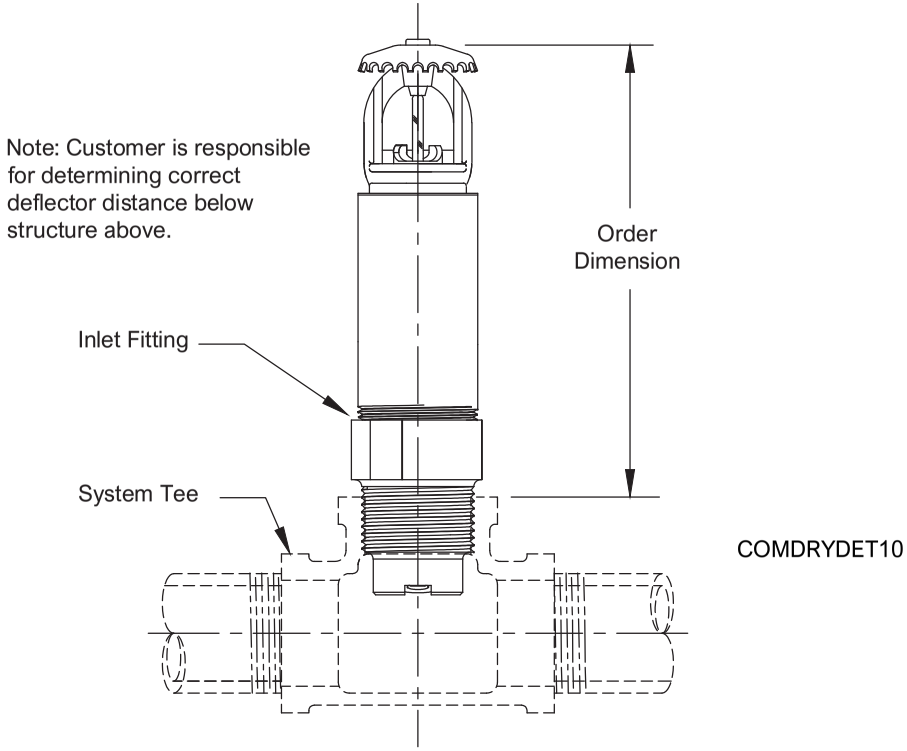

Finish Combinations: Upright	
Sprinkler	**Escutcheon**
Bronze	NA
Electroless Nickel PTFE[1]	NA

Notes:
1. UL Listed as Corrosion Resistant.

Installation (General)

Dry sprinklers connected to wet pipe systems must be installed as indicated in Figure 14 and as required by NFPA 13 with the Exposed Minimum Barrel Length located in a heated area.

Reliable Model F3QR56 dry sidewall sprinklers may be installed in ductile or malleable cast iron threaded tees, or CPVC tees and adapters upon verification that the sprinkler inlet fitting does not interfere with the interior of the fitting (see Figure 15).

DO NOT install Reliable Model F3QR56 dry sidewall sprinklers into elbows or couplings, welded outlets, mechanical tees, or gasket sealed CPVC fittings.

See Figure 16 for acceptable and unacceptable installation practices.

F3QR56 with Standard Escutcheon

Cut a 2-1/8" (54mm) diameter hole in the wall as shown in Fig. 1. Apply a PTFE based sealant to the sprinkler threads before installing into the fitting. Use the Model F3R installation wrench on the square boss to tighten the sprinkler until it is secured in the sprinkler fitting. Installation is completed by removing the orange glass bulb protector and sliding the escutcheon over the finished sleeve until tight to the finished surface.

F3QR56 with HB Escutcheon

Cut a 2-1/2" (64mm) diameter hole in the wall as shown in Fig. 2. Apply a PTFE based sealant to the sprinkler threads before installing into the fitting. Use the Model F3R installation wrench on the square boss to tighten the sprinkler until it is secured in the sprinkler fitting. Installation is completed by removing the orange glass bulb protector and sliding the skirt over the finished sleeve until tight to the finished suface.

F3QR56 with FP Recessed Escutcheon

Cut a 2-5/8" (67mm) diameter hole in the wall as shown in Fig. 3. Apply a PTFE based sealant to the sprinkler threads before installing into the fitting. Use the Model XLO2 installation wrench (see Fig. 13) on the square boss to tighten the sprinkler until it is secured in the sprinkler fitting. Installation is completed by removing the orange glass bulb protector and pushing (or threading) the FP escutcheon into the threaded cup. Final adjustment is made by turning the FP escutcheon clockwise until the flange makes full contact with the wall surface.

F3QR56 CCP Concealed Cover Plate

Cut a 2-5/8" (67mm) diameter hole in the wall as shown in Fig. 4. Apply a PTFE based sealant to the sprinkler threads before installing into the fitting. Use the Model XLO2 installation wrench (see Fig. 13) on the square boss to tighten the sprinkler until it is secured in the sprinkler fitting. Installation is completed by removing the orange glass bulb protector and pushing (or threading) the SWC cover plate into the threaded cup. Final adjustment is made by turning the cover plate clockwise until the cover plate flange makes full contact with the finished surface.

Note:

1. The Model XLO2 installation wrench for recessed and concealed installations has a open side to accommodate the sprinkler deflector and can only be inserted in one way (see Figure 13). Care must be taken not to damage the deflector during installation.
2. Do not over-tighten sprinklers into fittings. It is recommended that Reliable dry sprinklers be installed using the wrench referenced in this bulletin. A pipe wrench may also be used to install dry sprinklers provided that it only engages the outer tube (steel pipe) of the assembly. Note that a pipe wrench will impart a large amount of torque into the final assembly. This torque will need to be matched or exceeded to remove the sprinkler at a later date. A leak free joint can normally be obtained by installing the sprinkler to a minimum torque of 22 ft-lb (30 N·m) after applying an appropriate thread sealant.
3. Glass bulb sprinklers have orange bulb protectors to minimize bulb damage during shipping, handling, and installation. Reliable installation wrenches are designed to install sprinklers while bulb protectors are in place. REMOVE THE PROTECTORS AT THE TIME THE SPRINKLER SYSTEM IS PLACED INTO SERVICE. Removal of the protectors before this time may leave the glass bulb vulnerable to damage. Remove protectors by undoing the clasp by hand. DO NOT USE TOOLS TO REMOVE THE PROTECTORS.
4. Do not remove the wax fillet in the gap between the cup that supports the bulb and the wrenching boss.

XLO2 Installation Procedure **Figure 13**

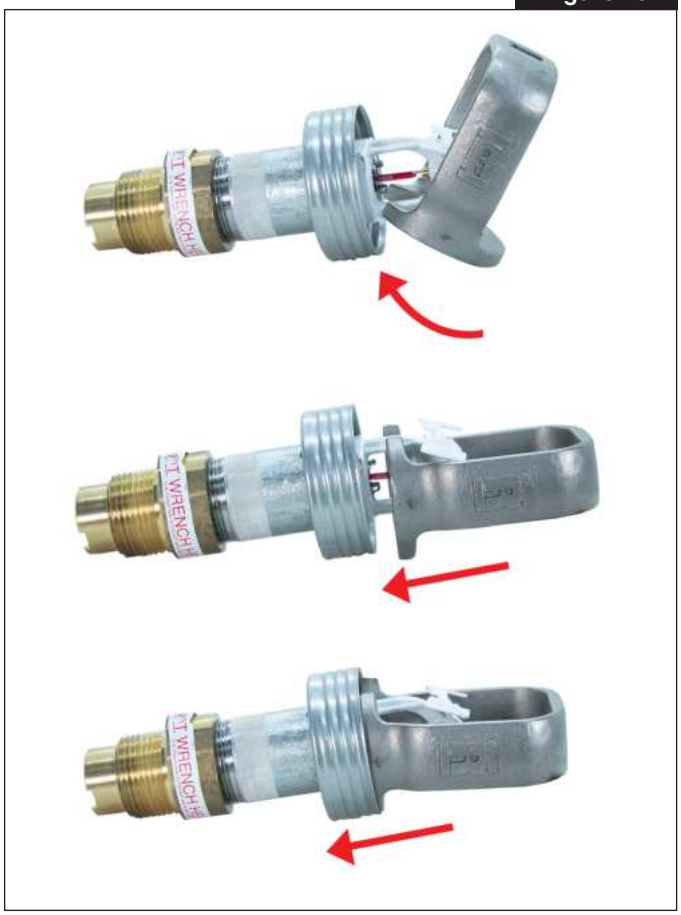

Figure 14

MINIMUM EXPOSED BARREL LENGTH WHEN CONNECTED TO WET PIPE SPRINKLER SYSTEM

NOTE: STANDARD DRY PENDENT IS SHOWN, HOWEVER, MINIMUM EXPOSED BARREL LENGTH APPLIES TO ALL STYLES OF DRY SPRINKLERS CONNECTED TO A WET PIPE SYSTEM.

AMBIENT TEMPERATURE EXPOSED TO DISCHARGE END OF SPRINKLER*	EXPOSED BARREL AMBIENT TEMPERATURE		
	40°F/4°C	50°F/10°C	60°F/16°C
	EXPOSED MINIMUM BARREL LENGTH** (FACE OF FITTING TO TOP OF CEILING)***		
	IN. (MM)	IN. (MM)	IN. (MM)
40°F (4°C)	0	0	0
30°F (−1°C)	0	0	0
20°F (−7°C)	4 (100)	0	0
10°F (−12°C)	8 (200)	1 (25)	0
0°F (−18°C)	12 (300)	3 (75)	0
−10°F (−23°C)	14 (350)	4 (100)	1 (25)
−20°F (−29°C)	14 (350)	6 (150)	3 (75)
−30°F (−34°C)	16 (400)	8 (200)	4 (100)
−40°F (−40°C)	18 (450)	8 (200)	4 (100)
−50°F (−46°C)	20 (500)	10 (250)	6 (150)
−60°F (−51°C)	20 (500)	10 (250)	6 (150)

* FOR AMBIENT TEMPERATURES EXPOSED TO THE DISCHARGE END OF THE SPRINKLER THAT OCCUR BETWEEN THE VALUES LISTED, USE THE NEXT COOLER TEMPERATURE.

** THE MINIMUM EXPOSED BARREL LENGTH IS NOT THE SAME AS THE "A" DIMENSION. THE MINIMUM EXPOSED BARREL LENGTH IS BASED ON A PROPERLY SEALED PENETRATION WITH A MAXIMUM WIND VELOCITY ON THE EXPOSED SPRINKLER OF 30 MPH (48 KM/H). LONGER EXPOSED BARREL LENGTHS WILL HELP AVOID FREEZING OF THE WET PIPING WHERE HIGHER WIND VELOCITY IS EXPECTED.

*** THE MINIMUM EXPOSED BARREL LENGTH IS MEASURED FROM THE FACE OF THE FITTING TO THE INSIDE FACE OF THE INSULATION, WALL, OR CEILING LEADING TO THE COLD SPACE, WHICHEVER IS CLOSEST TO THE FITTING.

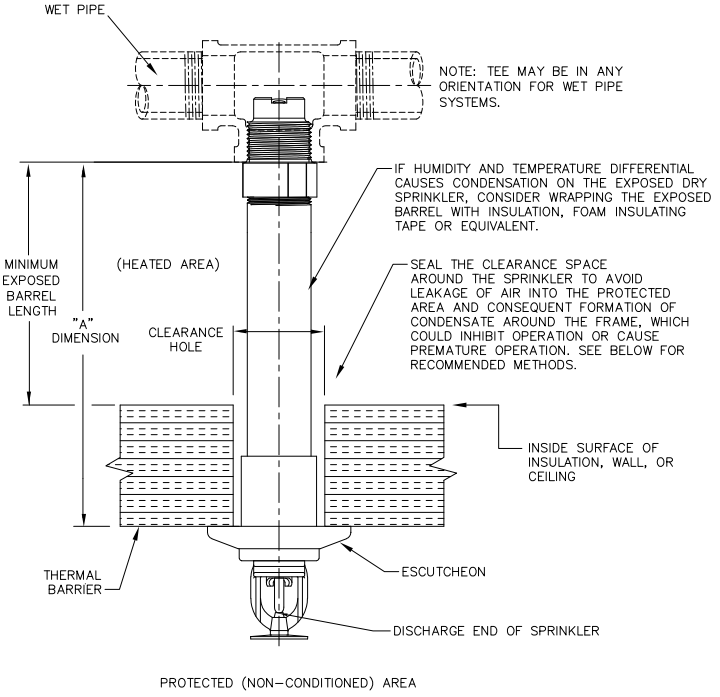

RECOMMENDED DRY SPRINKLER SEAL ARRANGEMENTS
(DRY SPRINKLER WITH STANDARD ESCUTCHEON SHOWN)

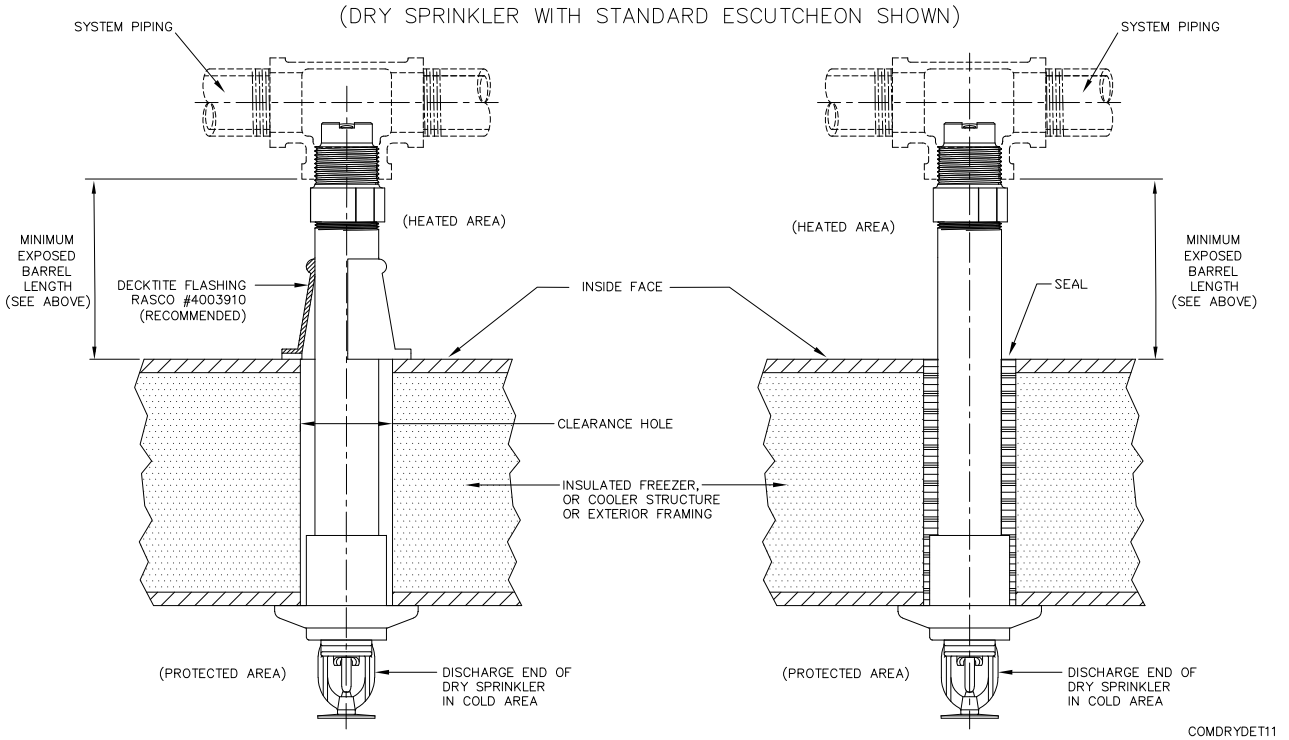

Figure 15

CAUTION

RELIABLE DRY SPRINKLERS MAY BE INSTALLED IN A LISTED CPVC SPRINKLER FITTING, ONLY UPON VERIFICATION THAT THE FITTING DOES NOT INTERFERE WITH THE SPRINKLER'S INLET.

Do not install dry sprinklers with standard inlets into CPVC fittings that have an internal obstruction; this will damage the sprinkler, the fitting, or both.

Short inlet ("PL") versions of Reliable dry sprinklers are available that may or may not be compatible with fittings having internal obstructions in existing installations. Sprinklers with the short inlet ("PL") should only be installed in CPVC fittings of wet-pipe systems.

In all cases, verify sprinkler and fitting dimensions prior to installation to avoid interference.

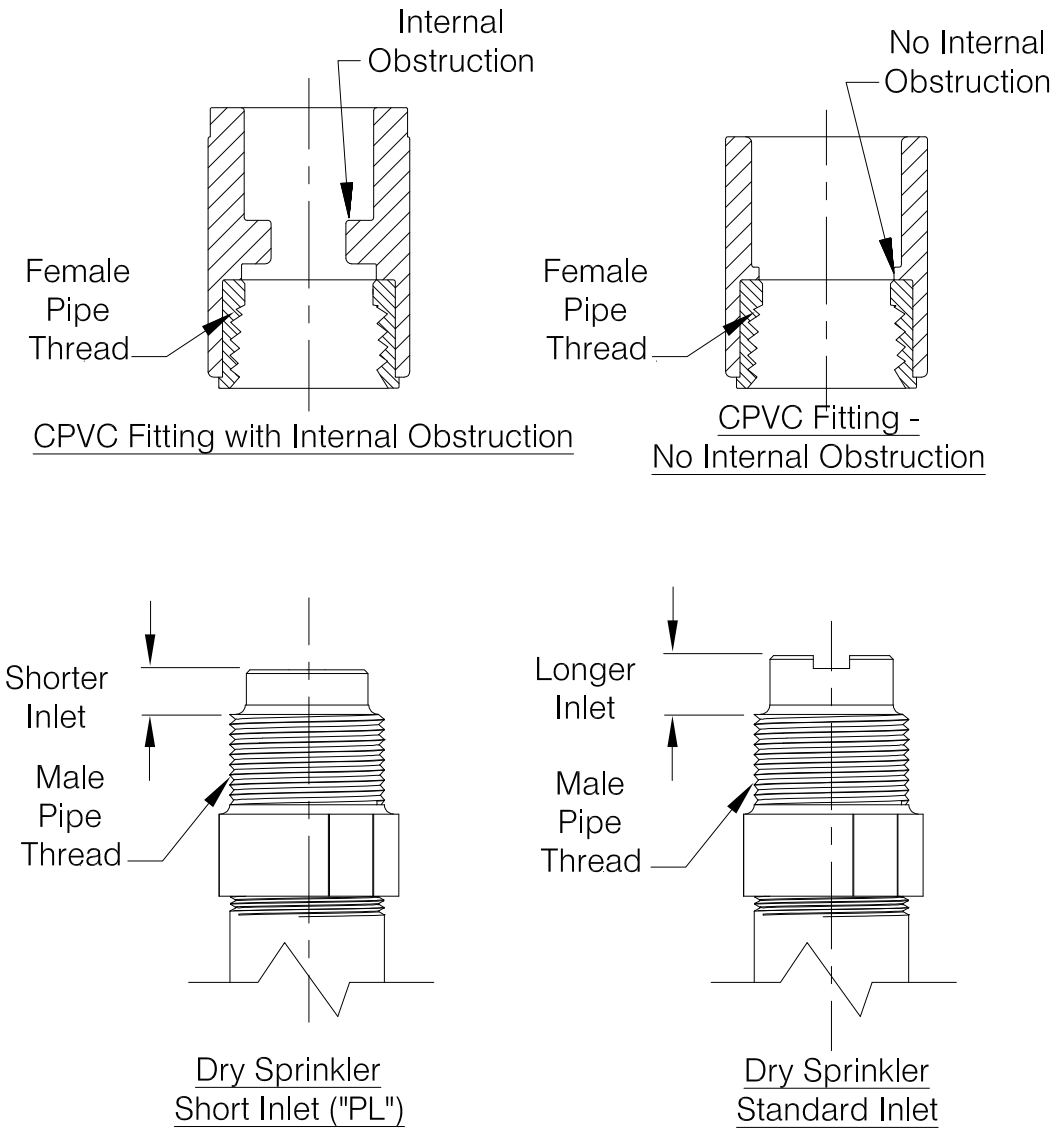

BE SURE TO ORDER THE CORRECT SPRINKLERS FOR YOUR APPLICATION

COMDRYDET2

Acceptable and Unacceptable Installation Practices for Steel Pipe Fittings

Figure 16

ACCEPTABLE INSTALLATIONS FOR DRY PENDENT SPRINKLERS

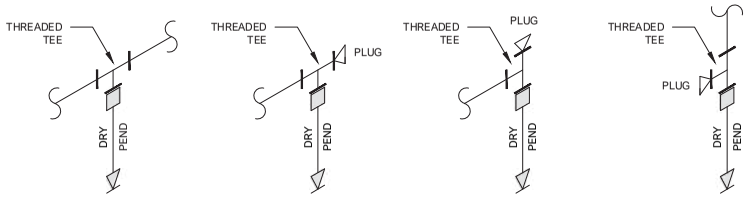

NOTES:
1. EXPOSED LENGTH OF DRY BARREL INSIDE OF CONDITIONED SPACE TO BE IN ACCORDANCE WITH THIS BULLETIN AND NFPA 13.

UNACCEPTABLE INSTALLATIONS FOR DRY PENDENT SPRINKLERS

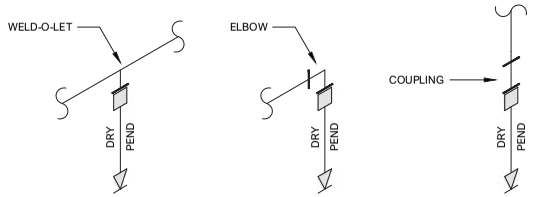

NOTES:
1. IN ADDITION TO THE UNACCEPTABLE INSTALLATIONS ABOVE, DRY PENDENT SPRINKLERS SHALL NOT BE INSTALLED INTO MECHANICAL TEES (SADDLE OR U-BOLT STYLE), OR INTERNALLY GASKETED CPVC FITTINGS.

ACCEPTABLE INSTALLATIONS FOR DRY SIDEWALL SPRINKLERS

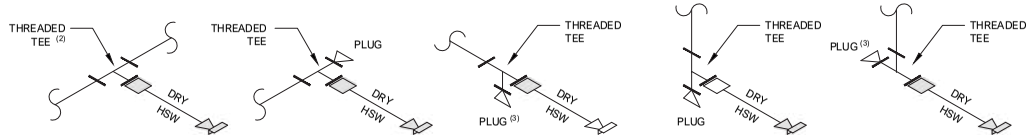

NOTES:
1. EXPOSED LENGTH OF DRY BARREL INSIDE OF CONDITIONED SPACE TO BE IN ACCORDANCE WITH THIS BULLETIN AND NFPA 13.
2. WELD-O-LETS IN COMPLIANCE WITH NFPA 13 REQUIREMENTS ALSO ACCEPTABLE FOR DRY SIDEWALL SPRINKLERS.
3. PREFERRED ORIENTATION OF PLUG IS DOWN.

UNACCEPTABLE INSTALLATIONS FOR DRY SIDEWALL SPRINKLERS

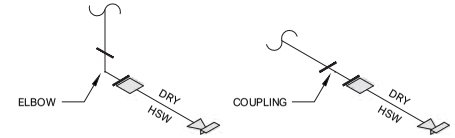

NOTES:
1. IN ADDITION TO THE UNACCEPTABLE INSTALLATIONS ABOVE, DRY SIDEWALL SPRINKLERS SHALL NOT BE INSTALLED INTO MECHANICAL TEES (SADDLE OR U-BOLT STYLE), OR INTERNALLY GASKETED CPVC FITTINGS.

ACCEPTABLE INSTALLATIONS FOR DRY UPRIGHT SPRINKLERS

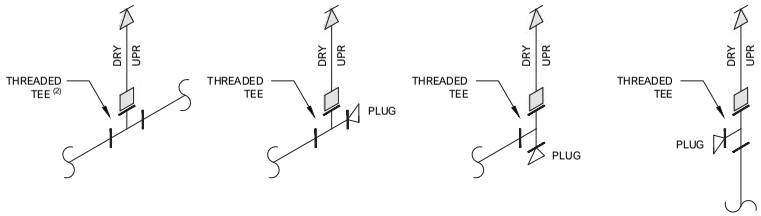

NOTES:
1. EXPOSED LENGTH OF DRY BARREL INSIDE OF CONDITIONED SPACE TO BE IN ACCORDANCE WITH THIS BULLETIN AND NFPA 13.
2. WELD-O-LETS IN COMPLIANCE WITH NFPA 13 REQUIREMENTS ALSO ACCEPTABLE FOR DRY UPRIGHT SPRINKLERS.

UNACCEPTABLE INSTALLATIONS FOR DRY UPRIGHT SPRINKLERS

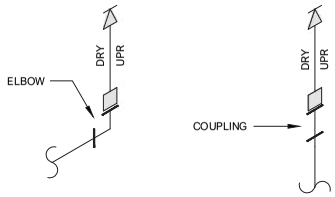

NOTES:
1. IN ADDITION TO THE UNACCEPTABLE INSTALLATIONS ABOVE, DRY UPRIGHT SPRINKLERS SHALL NOT BE INSTALLED INTO MECHANICAL TEES (SADDLE OR U-BOLT STYLE), OR INTERNALLY GASKETED CPVC FITTINGS.

Figure 17

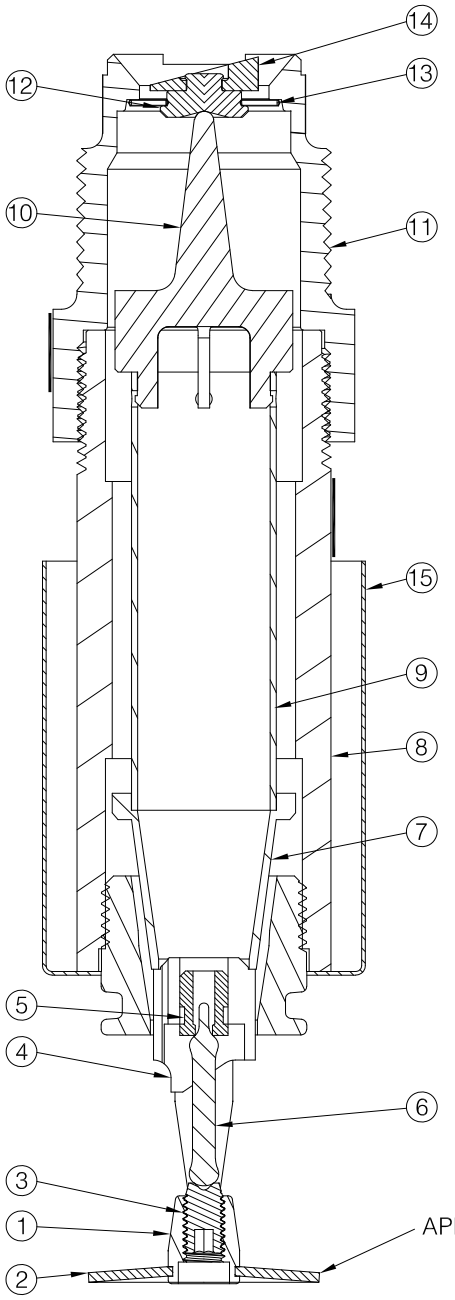

Item	Description	Material
1	Frame	UNS C83600 Brass
2	Deflector	UNS C51000 Bronze
3	Load Screw	UNS C22000 Brass
4	Seat Adapter	UNS C36000 Brass
5	Bulb Insert	UNS C31400 Copper
6	Glass Bulb	Glass/Glycerin Solution
7	Orifice Adapater	UNS C36000 Brass
8	Outer Tube	Galvanized Steel
9	Inner Tube	UNS C23000 Brass
10	Yoke	UNS C38000 Brass
11	Inlet	UNS C35330 Brass
12	Cap	UNS C54400 Brass
13	Spring Washer/Seal	PTFE Coated Beryllium Nickel
14	Flip Disk	UNS C54400 Brass
15	Can/Escutcheon	Varies (Not used on all models)

NOTE: PIPE WRENCH MAY ONLY BE USED ON OUTER STEEL BARREL OF SPRINKLER

COMDRYDET13

APPEARANCE OF DEFLECTOR WILL VARY DEPENDING ON MODEL

Wrench Options

F3R Wrench
(Standard, HB, and No Escutcheon trims)

XLO2 Wrench
(FP Recessed, F1 Recessed, and CCP trims)

Maintenance

Reliable Model F3QR56 series sprinklers should be inspected and the sprinkler system maintained in accordance with NFPA 25, as well as the requirements of any Authorities Having Jurisdiction. Prior to installation, sprinklers should remain in the original cartons and packaging until used. This will minimize the potential for damage to sprinklers that could cause improper operation or non-operation.

Do not clean sprinklers with soap and water, ammonia liquid or any other cleaning fluids. Remove dust by gentle vacuuming without touching the sprinkler.

Replace any sprinkler which has been painted (other than factory applied). A stock of spare sprinklers should be maintained to allow quick replacement of damaged or operated sprinklers. Failure to properly maintain sprinklers may result in inadvertent operation or non-operation during a fire event.

Guarantee

For the Reliable Automatic Sprinkler Co., Inc. guarantee, terms, and conditions, visit www.reliablesprinkler.com.

Patents

US Patent No. 7,841,418

Ordering Information

Specify:

Model F3QR56 Dry Sprinkler
- Upright
- Pendent
- Horizontal Sidewall

Trim Style
- Standard Escutcheon
- HB Escutcheon
- FP Recessed Escutcheon
- F1 Recessed Escutcheon
- CCP Cover Plate (Pendent only)
- No Escutcheon

Temperature Rating
- See available temperatures (depending on trim style and approvals) on pages 2-13

Finish
- See available finish combinations (depending on trim style and approvals) on pages 2-13

Length
- For dry pendent and sidewall sprinklers with trim, “A” dimension is measured from face of fitting to face of finished ceiling or wall in 1/4” (6mm) increments.
- For dry upright sprinklers and sprinklers with no trim, order dimension is from face of fitting to deflector in 1/4” (6mm) increments.

Notes:

1. Lengths are based upon a normally gauged pipe thread “make-up” of .60 inch (15mm) per ANSI B2.1 (approximately 7-1/2 threads).

Installation Wrench
- Model F3R (Standard, HB, and No Escutcheon trims)
- Model XLO2 (FP Recessed, F1 Recessed & CCP trims)