F1-56 Series
Standard-Response Sprinklers

K-factor 5.6 (80)

Features

- Standard coverage standard-response sprinklers
- Upright, pendent, horizontal sidewall, and vertical sidewall deflectors
- Low profile, compact design
- Available in a wide variety of finishes
- Available as Intermediate Level Sprinklers

Product Description

Reliable Model F1 series sprinklers are standard-response standard spray automatic fire sprinklers utilizing a 5.0 mm glass bulb thermal element.

Pendent and horizontal sidewall sprinklers may be installed exposed or surface mounted using escutcheons such as the Reliable Models B, C, or HB (reference Technical Bulletin 204). When installed recessed, the Model F1-56 series sprinklers are specifically listed with and may only be installed with listed Reliable escutcheons. Refer to the technical information on the following pages for specific listings for recessed installations and refer to Figures 7 and 8 for dimensional information.

When fitted with an approved water shield, these sprinklers may considered intermediate sprinklers for use in racks, below grated walkways, and other areas where intermediate level sprinklers are required.

Table A provides a summary of the approvals and availability of specific Model F1 series sprinkler configurations. Additional technical information for each sprinkler model is provided on the following pages.

Important! Reliable fire sprinklers must be handled, stored, and installed in accordance with the guidelines in Caution Sheet 310 and this bulletin. Failure to follow these instructions may result in unintended operation or nonoperation of the fire protection system.

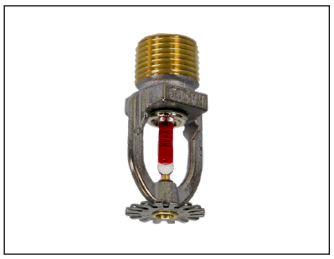

Model F1-56 Pendent

Model F1-56 Upright

Model F1-56 Vertical Sidewall

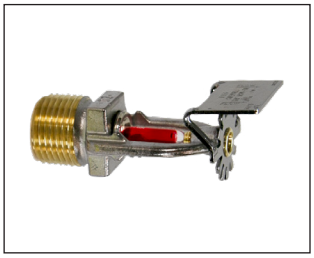

Model F1-56 Horizontal Sidewall

Note: Not all versions of the product are shown.

Note: This bulletin may contain information on New and Legacy sprinklers that reflects a dimensional change only.

Sprinkler Identification Number (SIN), application, performance, and listings/approval are not otherwise affected. Sprinklers with New frames will include the suffix “N” in the order.

F1-56 Series Sprinkler Summary — **Table A**

Sprinkler Model	K-Factor gpm/psi$^{1/2}$ (lpm/bar$^{1/2}$)	Orientation	Listings & Approvals	Max. Working Pressure psi (bar)	Sprinkler Identification Number (SIN)
F1-56	5.6 (80)	Upright Intermediate Upright	cULus, FM, LPCB, VdS, EC, UKCA	175 (12) 250 (17) (cULus only)	RA1325
		Pendent	cULus, FM, LPCB, VdS, EC, UKCA	175 (12) 250 (17) (cULus only)	RA1314
		Horizontal Sidewall	cULus, FM	175 (12)	RA1335
		Vertical Sidewall	cULus, FM, LPCB, UKCA	175 (12)	RA1385

Model F1-56 Upright Sprinkler — SIN RA1325

Technical Specifications
Style: Upright, Intermediate Upright
Threads: 1/2" NPT or ISO 7-R1/2
Nominal K-Factor: 5.6 (80 metric)
Max. Working Pressure:
175 psi (12 bar)
250 psi (17 bar) (cULus only)

Material Specifications
Thermal Sensor: 5.0mm Glass Bulb
Sprinkler Frame: Brass Alloy
Cap: Bronze Alloy
Sealing Washer: Nickel with PTFE
Load Screw: Copper Alloy
Deflector: Brass Alloy

Sprinkler Finishes
(See Table B)

Sensitivity
Standard response

Temperature Ratings
135°F (57°C)
155°F (68°C)
175°F (79°C)
200°F (93°C)
286°F (141°C)
360°F (182°C)
500°F (260°C)

Guards & Shields (New Frames)
Factory Water Shield (cULus, FM)
F-1 Guard (cULus, FM)
F-3 Guard with Shield (cULus, FM)

Guards and Shields (Legacy Frames)
Factory Water Shield
C-1 Guard (FM)
C-3 Guard with Shield (cULus, FM)
D-1 Guard (cULus)
D-3 Guard with Shield (cULus)

Sprinkler Wrench
Model W2
Model W14 (New frame with guard installed)
Model W13 (Legacy frame with guard installed)

Listings and Approvals
cULus Listed
FM Approved
LPCB
VdS
EC
UKCA: 0832-UKCA-CPR-S5045

Model F1-56 Upright Sprinkler Components and Dimensions — Figure 1

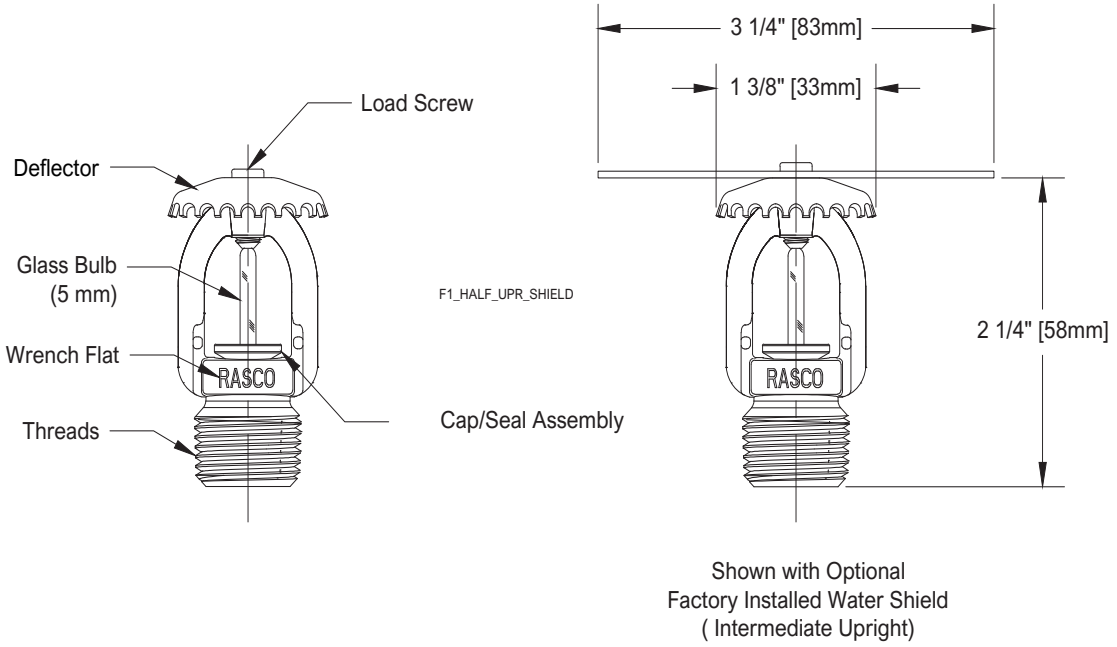

Model F1-56 Pendent Sprinkler — SIN RA1314

Technical Specifications
- **Style:**
  - Pendent
  - Recessed Pendent
- **Threads:** 1/2" NPT or ISO 7-R1/2
- **Nominal K-Factor:** 5.6 (80 metric)
- **Max. Working Pressure:**
  - 175 psi (12 bar)
  - 250 psi (17 bar) (cULus only)

Material Specifications
- **Thermal Sensor:** 5.0mm Glass Bulb
- **Sprinkler Frame:** Brass Alloy
- **Cap:** Bronze Alloy
- **Sealing Washer:** Nickel with PTFE
- **Load Screw:** Copper Alloy
- **Deflector:** Brass Alloy

Sprinkler Finishes
(See Table B)

Sensitivity
Standard response

Temperature Ratings [1]
- 135°F (57°C)
- 155°F (68°C)
- 175°F (79°C)
- 200°F (93°C)
- 286°F (141°C)
- 360°F (182°C)
- 500°F (260°C)

Recessed Escutcheons
- Model F1 (cULus, LPCB, VdS, CE)
- Model F2 (cULus, FM, LPCB, VdS, CE)
- Model FP (cULus, VdS, CE)

Guards & Shields(New Frames)[2]
- F-1 Guard (FM)
- F-5 Guard/Shield Kit (FM)
- F-7 Guard (cULus)
- F-8 Guard/Shield Kit (cULus)
- S-1 Shield (cULus, FM)

Guards & Shields (Legacy Frames)[2]
- C1 Guard (FM)
- C5 Guard/Shield Kit (FM)
- D1 Guard (cULus, FM)
- D4 Guard/Shield Kit (FM)
- D5 Guard/Shield Kit (cULus, FM)
- S-1 Shield (cULus, FM)

Sprinkler Wrenches
- Model W2 (pendent)
- Model W4 (recessed)
- Model W14 (New frame with guard installed)
- Model W13 (Legacy frame with guard installed)

Listings and Approvals[3]
- cULus Listed
- FM Approved
- LPCB
- VdS
- EC
- UKCA: 0832-UKCA-CPR-S5045

Notes:
1. 286°F (141°C) and higher temperature rated sprinkler not listed for recessed use.
2. Not suitable for used with recessed pendent installations
3. When used surface mounted or exposed. See Recessed Escutcheon and Cover Plate section for specific approvals when installed recessed or concealed.

Model F1-56 Pendent Sprinkler Components and Dimensions — Figure 2

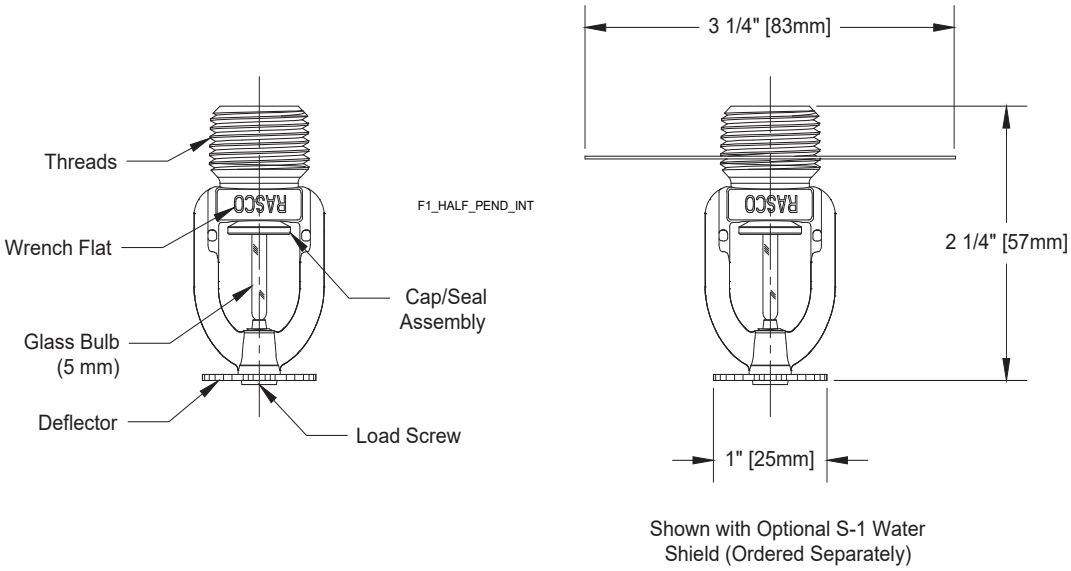

Note: Please refer to Figure 7 for recessed installation.

Model F1-56 Horizontal Sidewall Sprinkler — SIN RA1335

Technical Specifications
- **Style:** Horizontal Sidewall
- **Threads:** 1/2" NPT or ISO 7-R1/2
- **Nominal K-Factor:** 5.6 (80 metric)
- **Max. Working Pressure:** 175 psi (12 bar)

Material Specifications
- **Thermal Sensor:** 5.0mm Glass Bulb
- **Sprinkler Frame:** Brass Alloy
- **Cap:** Bronze Alloy
- **Sealing Washer:** Nickel with PTFE
- **Load Screw:** Copper Alloy
- **Deflector:** Brass Alloy

Sprinkler Finishes
(See Table B)

Sensitivity
Standard response

Temperature Ratings [1]
- 135°F (57°C)
- 155°F (68°C)
- 175°F (79°C)
- 200°F (93°C)
- 286°F (141°C)
- 360°F (182°C)

Recessed Escutcheons[2]
- Model F1 (cULus, FM)
- Model F2 (cULus, FM)
- Model FP (cULus)

Guards & Shields (New Frames)[3]
- F-4 Guard (FM)
- F-7 Guard/Shield Kit (cULus)

Guards & Shields (Legacy Frames)[3]
- F-4 Guard (FM)
- F-7 Guard/Shield Kit (cULus)

Sprinkler Wrenches
- Model W2 (horizontal)
- Model W4 (recessed)
- Model W14 (New frame with guard installed)
- Model W13 (Legacy frame with guard installed)

Listings and Approvals
- cULus Listed
- FM Approved[4]

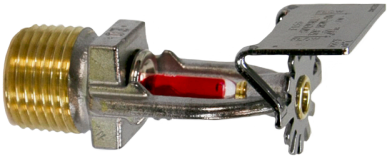

Notes:
1. 286°F (141°C) and higher temperature rated sprinkler not listed for recessed use.
2. cULus Listed for Light and Ordinary Hazard when installed exposed or surface mounted. Listed for Light Hazard ONLY when installed recessed.
3. Not suitable for recessed horizontal sidewall installations.
4. FM Approved for Light Hazard ONLY.

Model F1-56 Horizontal Sidewall Sprinkler Components and Dimensions — Figure 3

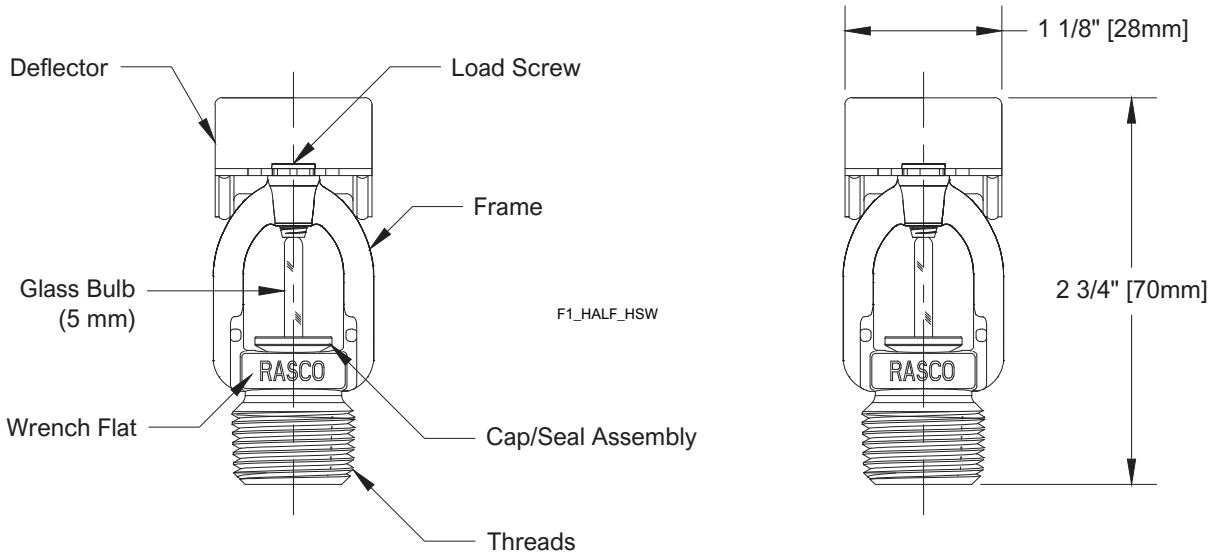

Note: Please refer to Figure 7 for recessed installation.

Model F1-56 Vertical Sidewall Sprinkler — SIN RA1385

Technical Specifications
Style:
Upright Vertical Sidewall
Pendent Vertical Sidewall
Threads: 1/2" NPT or ISO 7-R1/2
Nominal K-Factor: 5.6 (80 metric)
Max. Working Pressure: 175 psi (12 bar)

Material Specifications
Thermal Sensor: 5.0mm Glass Bulb
Sprinkler Frame: Brass Alloy
Cap: Bronze Alloy
Sealing Washer: Nickel with PTFE
Load Screw: Copper Alloy
Deflector: Brass Alloy

Sprinkler Finishes
(See Table B)

Sensitivity
Standard response

Temperature Ratings
135°F (57°C)
155°F (68°C)
175°F (79°C)
200°F (93°C)
286°F (141°C)
360°F (182°C)

Guards & Shields (New Frames)
F-2 Guard (FM)

Guards & Shields (Legacy Frames)
F-2 Guard (FM)

Sprinkler Wrenches
Model W2
Model W14 (New frame with guard installed)
Model W13 (Legacy frame with guard installed)

Listings and Approvals[1]
cULus Listed
FM Approved
LPCB[2]
UKCA: 0832-UKCA-CPR-S5045

Notes:
1. Listed and approved for Light Hazard ONLY.
2. LPCB approved for use in pendent position ONLY.

Model F1-56 Vertical Sprinkler Components and Dimensions — **Figure 4**

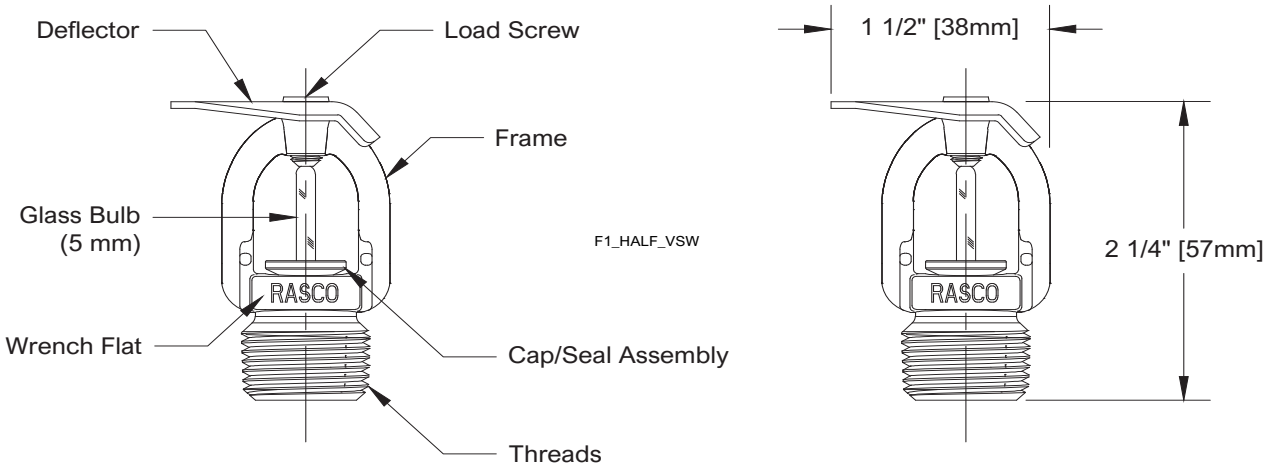

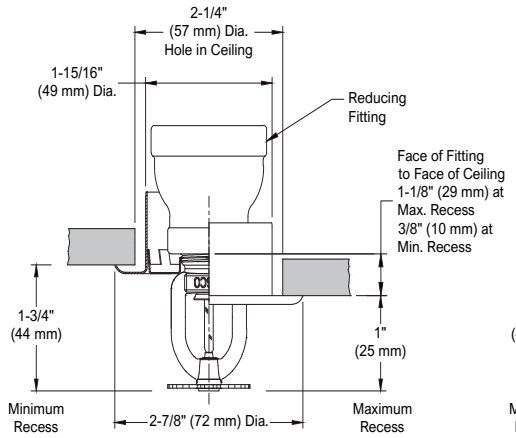

Models F1 & F1FR Pendent Sprinkler
with Model F1 Recessed Escutcheon
3/4" (19mm) Nominal Adjustment

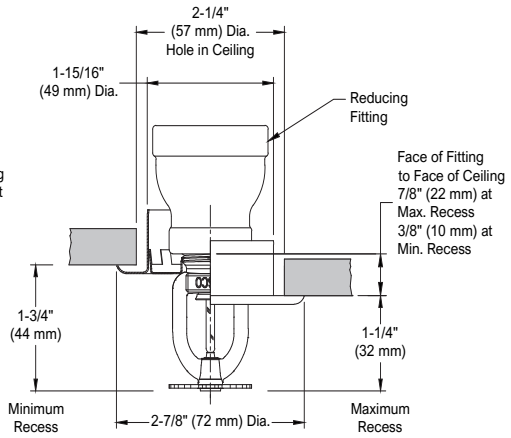

Models F1 & F1FR Pendent Sprinkler
with Model F2 Recessed Escutcheon
1/2" (13mm) Nominal Adjustment

F1_REC_PEND

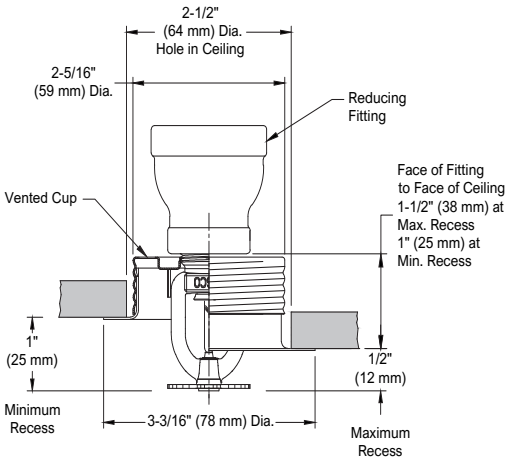

Models F1 & F1FR Pendent Sprinkler
with Model FP Recessed Escutcheon
1/2" (13mm) Nominal Adjustment

Note: Model FP recessed assemblies may not be used where the pressure in the space above the ceiling is positive with respect to the protected area. Ensure that the openings in the Model FP cup are unobstructed following installation.

FP Escutcheon

F1 Escutcheon
(F2 Similar)

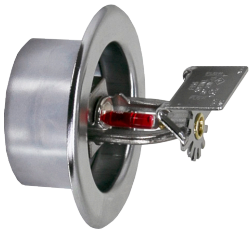

F1 Escutcheon
(F2 Similar)

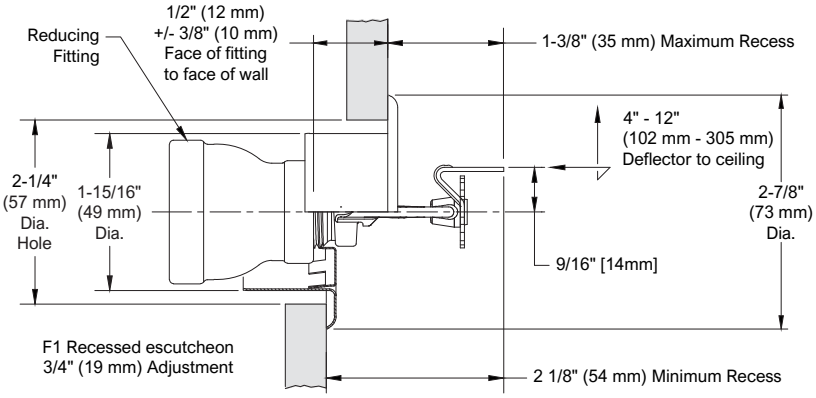

Model F1FR Horizontal Sidewall Sprinkler
with Model F1 Recessed Escutcheon
3/4" (19mm) Nominal Adjustment

F1FR_REC_HSW

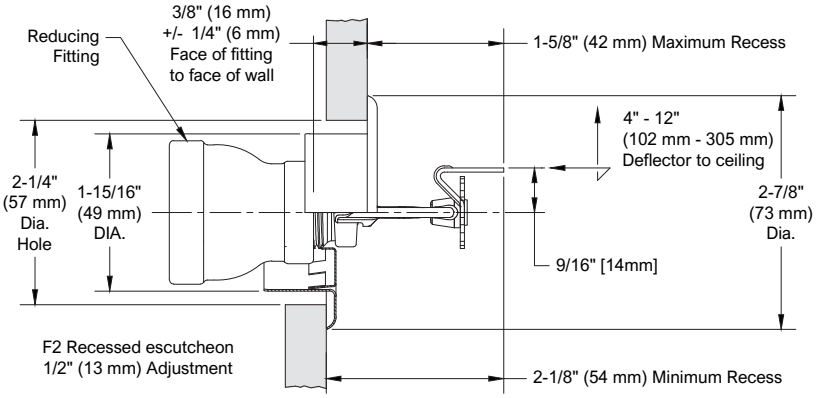

Model F1FR Horizontal Sidewall Sprinkler
with Model F2 Recessed Escutcheon
1/2" (13mm) Nominal Adjustment

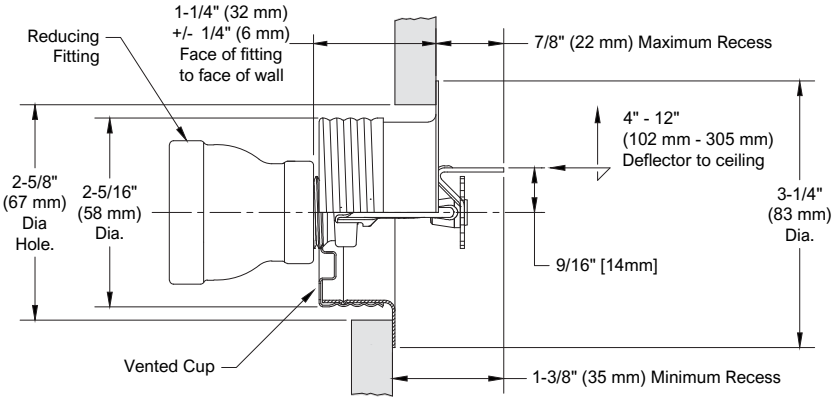

Model F1FR Horizontal Sidewall Sprinkler
with Model FP Recessed Escutcheon
1/2" (13mm) Nominal Adjustment

Note: Model FP recessed assemblies may not be used where the pressure in the space behind the sprinkler is positive with respect to the space in the protected area. Ensure that the openings in the Model FP cup are unobstructed following installation.

Wrenches

Model W2 (upright, pendent)

Model W13 (Legacy frame with guard installed)

Model W14 (New frame with guard installed)

Model W4
(recessed pendent)

Sprinkler and Escutcheon Finishes[1] — **Table B**

Standard Finishes		Special Application Finishes	
Sprinkler	**F1, F2 and FP[2] Escutcheons**	**Sprinkler**	**F1, F2 and FP[2] Escutcheons**
Bronze (Unfinished)	Brass	Electroless Nickel PTFE[3][4]	Bright Brass
Chrome	Chrome	Bright Brass[5]	Satin Chrome
White Polyester[3][8]	White Polyester	Satin Chrome	Custom Color Polyester
		Custom Color Polyester[3][6][8]	
		Lead Plated[3]	
		Wax Coated[3][7]	
		Wax Over Lead[3][7]	

Notes:
1. Paint or any other coating applied over the factory finish will void all approvals and warranties.
2. Model FP escutcheons utilize a galvanized steel cup with a finished trim ring.
3. cULus Listed as corrosion resistant.
4. FM Approved as corrosion resistant.
5. For 200°F (93°C) maximum temperature rated sprinklers only.
6. LPCB and VDS approved for SIN RA1314 and RA1325.
7. Clear wax used on ordinary temperature rated sprinklers; brown wax used on intermediate temperature rated sprinklers. Brown wax may be used on high temperature rated sprinklers where the ambient temperature does not exceed 150°F (66°C).
8. Not available for 500°F (260°C) temperature rated sprinklers.

Installation

Model F1 Series sprinklers must be installed in accordance with NFPA13 and the requirements of all applicable authorities having jurisdiction. Model F1 Series sprinklers must be installed with the Reliable sprinkler installation wrench identified in the Design and Installation Information table in this Bulletin. Any other wrench may damage the sprinkler. A leak tight sprinkler joint can be obtained with a torque of 8 to 18 lb-ft (11 to 24 N·m). Do not tighten sprinklers over the maximum recommended installation torque. Exceeding the maximum recommended installation torque may cause leakage or impairment of the sprinkler.

Glass bulb sprinklers have orange bulb protectors or protective caps to minimize bulb damage during shipping, handling and installation. Reliable sprinkler installation wrenches are designed to install sprinklers with bulb protectors in place. Remove the bulb protector at the time when the sprinkler system is placed in service for fire protection. Removal of the bulb protector before this time may leave the bulb vulnerable to damage. Remove bulb protectors by undoing the clasp by hand. Do not use tools to remove bulb protectors.

Maintenance

Reliable Model F1 series sprinklers should be inspected and the sprinkler system maintained in accordance with NFPA 25, as well as the requirements of any Authorities Having Jurisdiction.

Prior to installation, sprinklers should remain in the original cartons and packaging until used. This will minimize the potential for damage to sprinklers that could cause improper operation or non-operation.

Do not clean sprinklers with soap and water, ammonia liquid or any other cleaning fluids. Remove dust by gentle vacuuming without touching the sprinkler.

Replace any sprinkler which has been painted (other than factory applied). A stock of spare sprinklers should be maintained to allow quick replacement of damaged or operated sprinklers. Failure to properly maintain sprinklers may result in inadvertent operation or non-operation during a fire event.

Guarantee

For the guarantee, terms, and conditions, visit www.reliablesprinkler.com.

Ordering Information

Specify the following when ordering:

Model
- F1-56

Deflector/Orientation
- Upright
- Intermediate Upright
- Pendent
- Horizontal Sidewall
- Vertical Sidewall

Temperature Rating
- See sprinkler technical specifications

Sprinkler Finish
- See Table B

Recessed Escutcheon[(1)(2)]
- F1
- F2
- FP

Escutcheon Finish
- See Table B

Sprinkler Wrench
- Model W2 (upright and pendent)
- Model W4 (recessed)
- Model W14 (New frame with guard installed)
- Model W13 (Legacy frame with guard installed)

Notes:
1. 286°F (141°C) sprinklers are not listed to be used recessed.
2. For FM, recessed sprinklers must use the Model F2 escutcheon.

P/N 9999970620